CAD FILE:

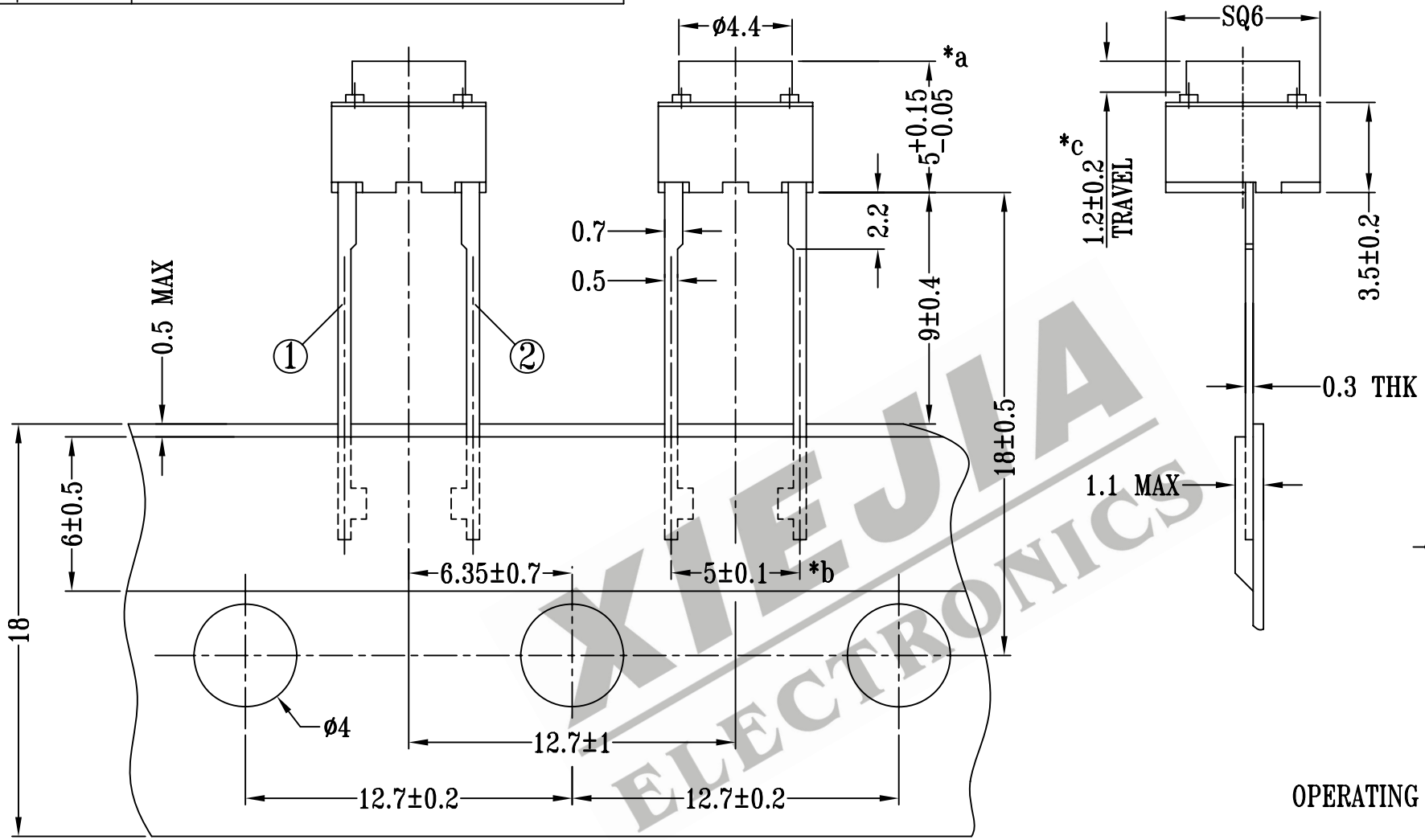

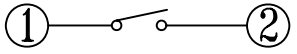

CIRCUIT DIAGRAM

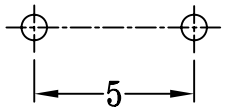

P.C.B LAYOUT

OPERATING FORCE : 150±50gf

注:带"*"表示关键尺寸(3个)

NO.	PARTS	MATERIALS	Q'TY	FINISH
8				
7	ADHESIVE TAPE	6x0.15mm ADHESIVE TAPE		
6	PAPER TAPE	18x0.4mm PAPER		
5	BAR	RUBBER	1	BLUE
4	CONTACT	PBS	1	Ag CLAD
3	CASE	NYLON+F.G/BRASS STRIP	1	BLACK/Ag PLATED OVER Ni PLATED
2	COVER	SUS	1	WASHING
1	KNOB	NYLON+F.G	1	MILKY

TOLERANCE UNLESS SPECIFIED
WITHIN: 1.5±0.1mm
OVER : 1.5±0.2mm

SHENZHEN XIEJIA ELECTRONICS CO.,LTD.

ISSUE	DATE	DESCRIPTIONS OF REVISION	APPD.

TITLE : TACT SWITCH
UNIT : mm
DRWG NO.: XJ-DR-TC1131-00
MODEL: TC-1131
SCALE: 4:1

DWN.	ZHOUYU	2004-7-24
CHK'D	FANGYING	2004-7-24
APPD.	KANGXINAN	2004-7-24

ALL MATERIALS MUST BE COMPLIANT TO ROHS

XIEJIA ELECTRONICS